JUMO GmbH & Co. KG
36035 Fulda, Germany
Telefax(0661) 6003-9695
e-mail: mailto:@jumo.net
www.jumo.net

02660, [illegible]
[illegible]: +38 (044) 494-33-55
[illegible] +38 (044) 494 33 66
http:// www.kck.ua

Heating Thermostat AMHs-1-80 Series

Version approved to DIN 3440 and Pressure Equipment Directive 97/23/EC

Brief description

Heating thermostats with a microswitch are used to monitor and control thermal processes, mainly in heating installations. The instrument in the AMHs-1-80 series consists of two independent measurement and switching systems.
The thermostats operate on the principle of liquid expansion, with a microswitch serving as the electrical switching device.

Switching action

Temperature controller (TR)
If the temperature at the probe goes above the selected setpoint, the electrical circuit is opened by a microswitch. If the temperature falls below the setpoint (by the amount of the switching differential) the microswitch returns to its initial position.

Lock-out function for the safety temperature limiter (STB)
If the temperature at the probe goes above the selected setpoint, the electrical circuit is opened and remains mechanically locked out.
When the temperature has fallen to about 10% of the span below the set limit, the microswitch can be reset manually.

Self-monitoring function for the safety temperature limiter (STB)
If the measuring system fails, i.e. if the expansion liquid has leaked, then the pressure under the diaphragm of the STB drops and the electrical circuit is permanently open. It is no longer possible to reset the system.
If the temperature at the probe falls below approx. -20°C the circuit is also opened, but will close again if the temperature rises above -20°C (approx.).

You will find the Declarations of Conformity on our website at:
www.jumo.net
⇨ Products
⇨ Data Sheet 60.3045
or ask for them to be sent.

Type and approvals

Type	Switching action	DIN Reg. No.	Tests
AMHs-1-80	TR / STB	TR / STB 97803	Pressure Equipment Directive 97/23/EC CE0036

Technical data

Electrical data	TR	STB
Switching device	Microswitch with changeover contact	Microswitch with changeover contact and lock-out
Contact rating	10 (2) A, 230 V AC +10%, p.f. = 1 (0.6) 0.25A, 230 V DC +10%	

Operating data	**TR** (externally adjustable)	**STB** (fixed setting in factory)
Control range, limits	+30 to + 90°C	+100°C
	+30 to +100°C	+110°C
	+40 to +110°C	+120°C
Switching differential	approx. 6 °C	—
Switching point accuracy	± 3 °C in upper third of scale	+0/-5 °C
Permissible ambient temperature in operation	+18 to 80°C	
Permissible storage temperature	-50 to +50°C	
Max. permissible probe temperature	+140°C	
Nominal position (NL)	to DIN 16 257, NL 0 — NL 90 (other NL on request)	

Case

Housing	Plastic housing in impact-resistant polycarbonate Color: cover pebble gray RAL 7032, base anthracite gray RAL 7016
Enclosure protection	EN 60 529-IP40
Cable entry	2 clamping glands M16x1.5
Weight	approx. 0.45 kg

Process connection

Pocket UH	Screw-in pocket with fixing screw, without shoulder for hemp sealing, material brass, thread: G½, fitting length 120 mm, support tube 15 mm diameter

Note:
Physical and toxological properties of the expansion fluid that might escape in the event of a system fracture.

Control range with end of scale	Dangerous reactions	Fire and explosion hazard		Water contamination	Toxocological data		
		Ignition temperature	Explosion limit		irritant	danger to health	toxic
< +200°C	no	+ 280°C	1.2 - 7.5% v/v	yes	yes	[1]	no

[1] At present, there is no restrictive statement from the health authorities concerning any danger to health over short periods, and at low concentration, e.g. after a fracture of the measuring system.

Connection diagram

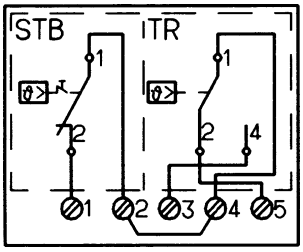

Dimensions

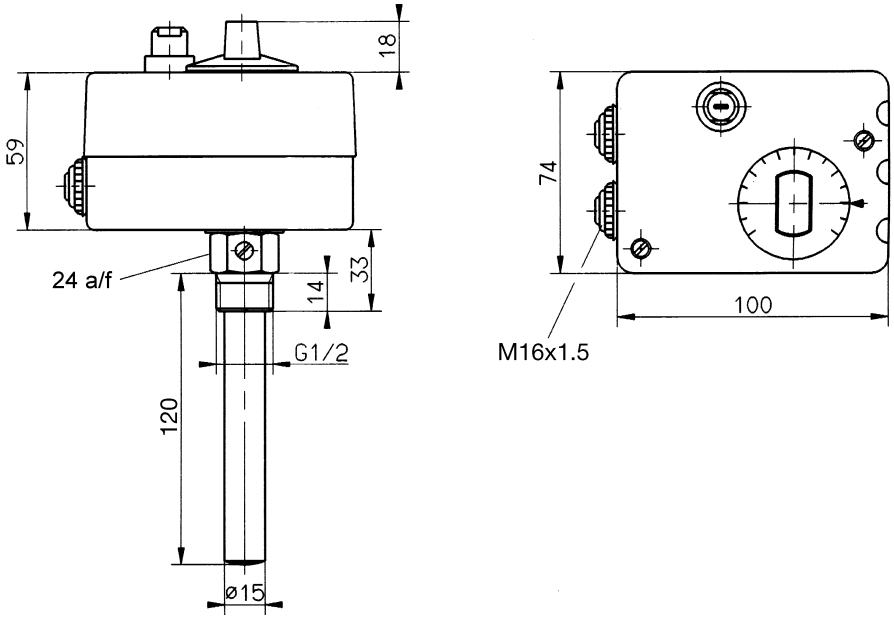

Order details: Type AMHs-1-80

	(1)	**Basic type (basic version)**
603045-0180		AMHs-1-80, heating thermostat with microswitch and rigid stem screw-in pocket UH G1/2, CuZn stem 15 x 120 mm, CuZn
	(2)	**Control ranges / limits**
050		+ 30 to + 90°C / +100°C
051		+30 to +100°C / +110°C
055		+40 to +110°C / +120°C

Order code

(1)		(2)
603045-0180	/	. . .

Order example

603045-0180 / 051 = Heating thermostat with control range/limit TR +30 to +100°C / STB +110°C